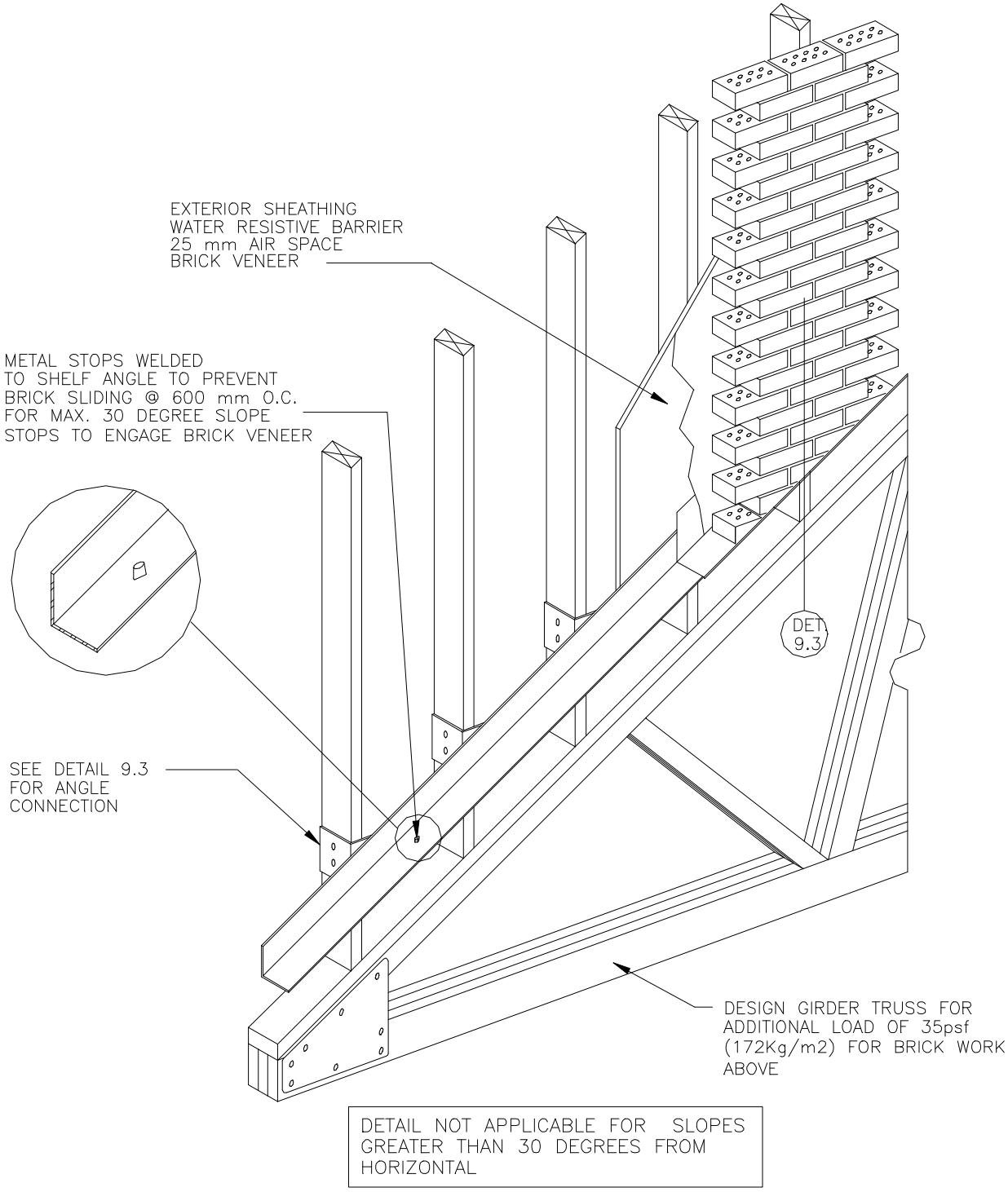

Detail 9.2 – Brick Veneer Supported by Truss (Typical Over Attached Garages)